BASE ELBOW ASSEMBLY

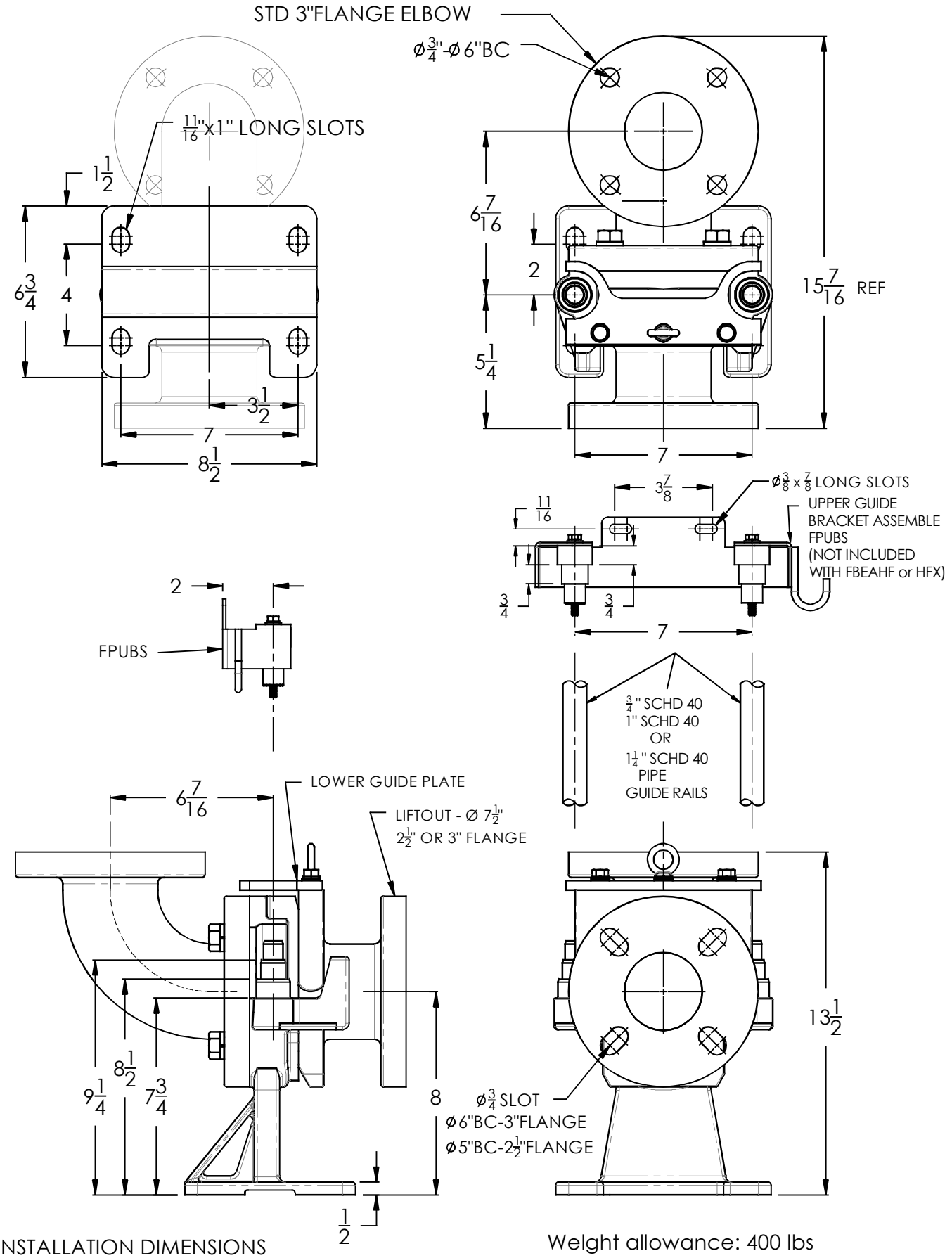


INSTALLATION DIMENSIONS

Weight allowance: 400 lbs